MPLS Physical Path Determination

How Is the LSP Physical Path Determined?

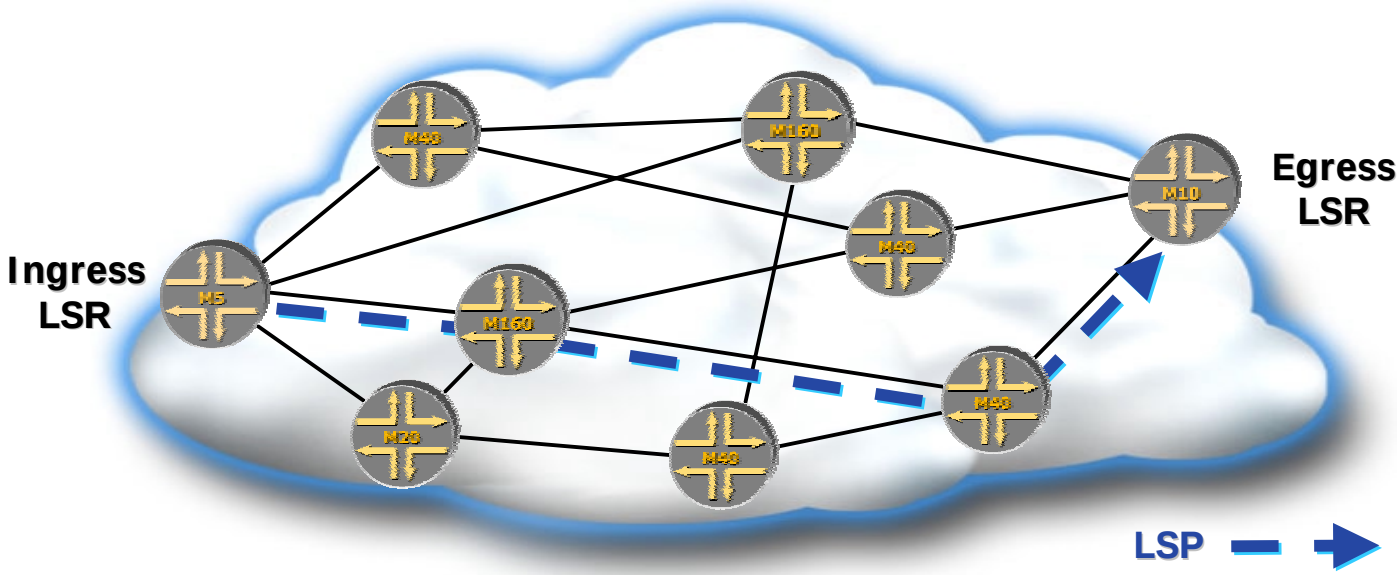

- Two approaches:
  - Offline path calculation (in house or 3rd party tools)
  - Online path calculation (constraint-based routing)
- A hybrid approach may be used
- Much more about constraint-based routing later!

Offline Path Calculation

- Simultaneously considers
  - All link resource constraints
  - All ingress to egress traffic trunks
- Benefits
  - Similar to mechanisms used in overlay networks
  - Global resource optimization
  - Predictable LSP placement
  - Stability
  - Decision support system
- In-house and third-party tools

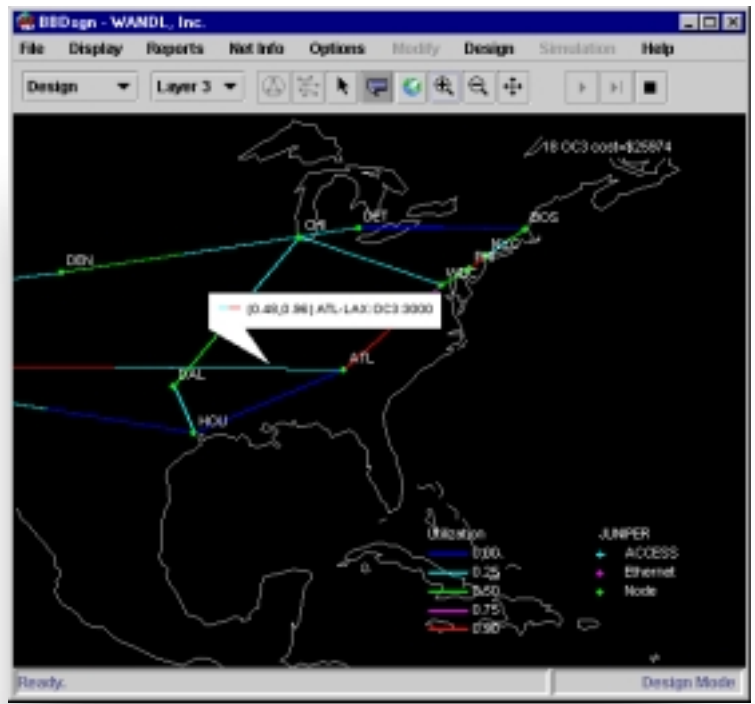

Offline Path Calculation

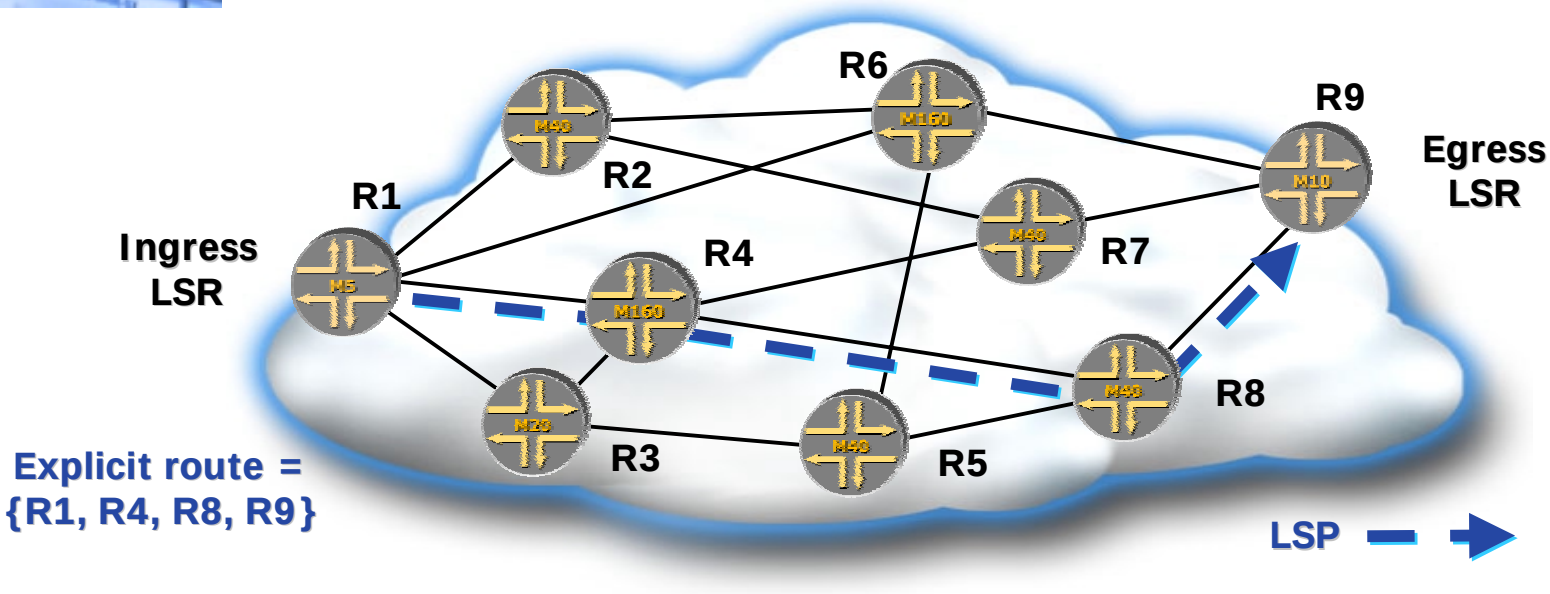

- Input to offline path calculation utility:
  - Ingress and egress points
  - Physical topology
  - Traffic matrix (statistics about city - router pairs)
- Output:
  - Set of physical paths, each expressed as an explicit route

MPLS Signaling Protocols

How Is an LSP Established?

- Requires a signaling protocol to:
  - Coordinate label distribution
  - Explicitly route the LSP
  - Bandwidth reservation (optional)
  - Class of Service (DiffServ style)
  - Resource re-assignment
  - Pre-emption of existing LSPs
  - Loop prevention
- MPLS signaling protocols
  - Label Distribution Protocol (LDP)
  - Resource Reservation Protocol (RSVP)
  - Constrained Routing with LDP (CR-LDP)

MPLS Signaling Protocols

- The IETF MPLS architecture does not assume a single label distribution protocol
- LDP
  - Executes hop-by-hop
  - Selects same physical path as IGP
  - Does not support traffic engineering
- RSVP
  - Easily extensible for explicit routes and label distribution
  - Deployed by providers in production networks
- CR-LDP
  - Extends LDP to support explicit routes
  - Functionally identical to RSVP
  - Not deployed

Label Distribution Protocol (LDP)

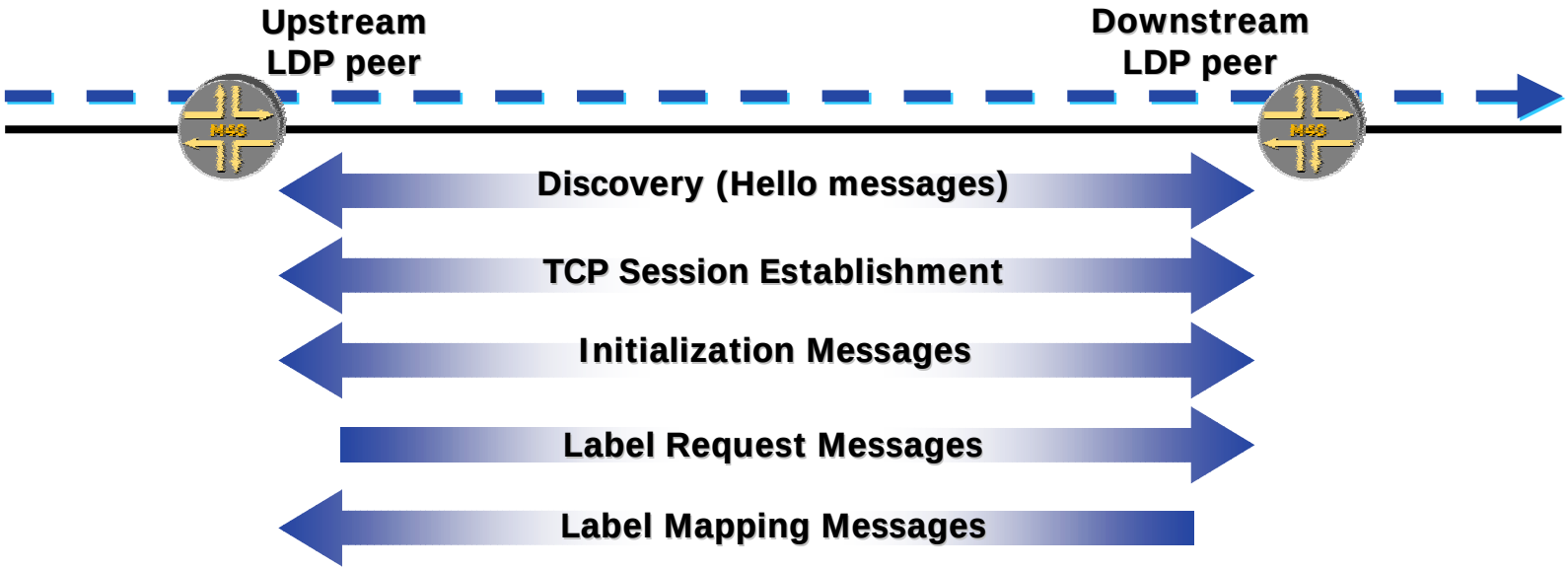

- Distributes label binding information
  - Runs on LSRs in conjunction with IP routing protocols
  - Labels are periodically refreshed
- LDP messages types
  - Discovery: Locate potential LDP peers
  - Session: Manage peer-to-peer TCP sessions
  - Advertisement: Create, change, or delete label mappings
  - Notification: Provide advisory information

Label Distribution Protocol (LDP)

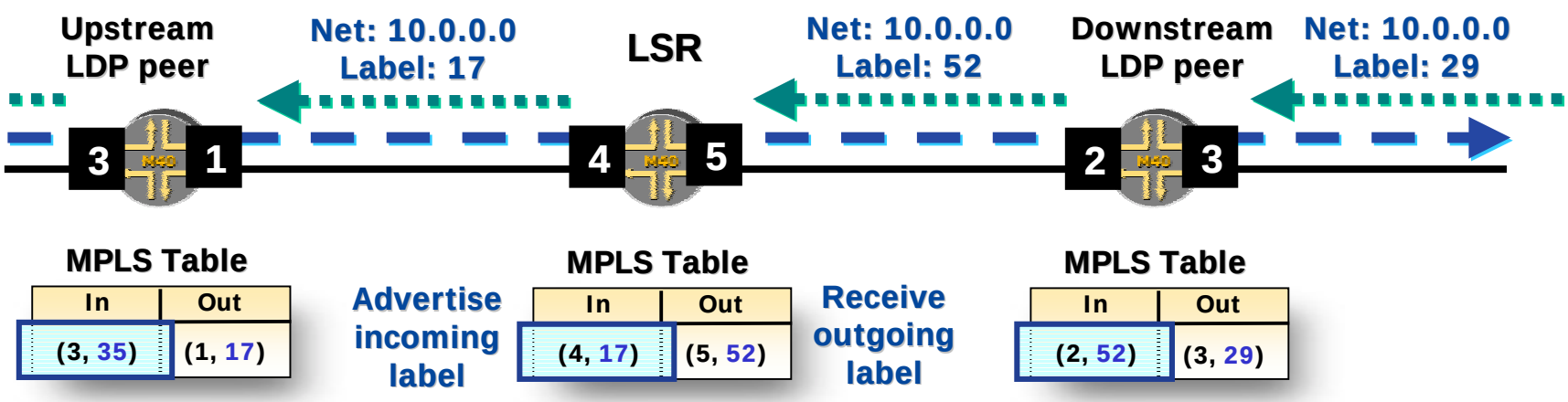

- Labels assigned by downstream peer
- Benefits
  - Labels are not piggybacked on routing protocols
- Limitations
  - LSPs follow the conventional IGP path
  - Does not support explicit routing

Resource Reservation Protocol

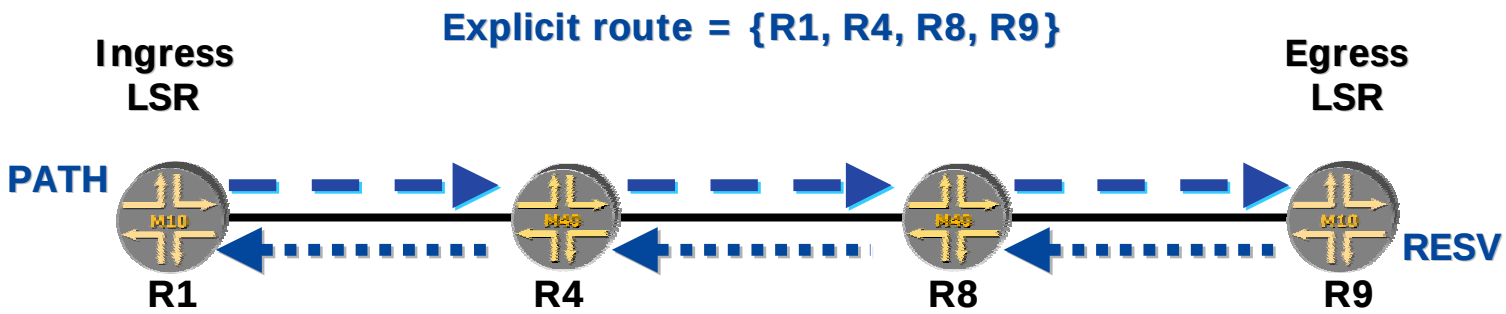

- Internet standard for reserving resources
- RSVP extensions for LSP tunnels
  - Explicit Route Object (ERO)
  - Label Request Object
  - Label Object
  - Session Object
  - Session Attribute Object
  - Record Route Object (RRO)
- RSVP message types
  - PATH: Establish state and request label assignment
  - RESV: Distribute labels & reserve resources
- Runs ingress-to-egress, not end-to-end

Extended RSVP – PATH Message

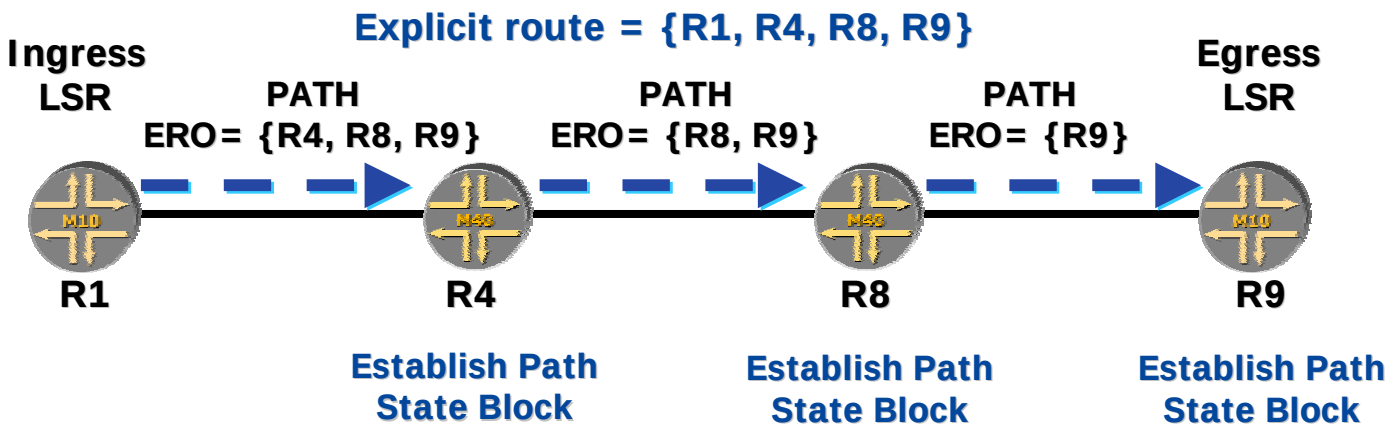

- Explicit route is passed to R1
- R1 transmits a PATH message addressed to R9
  - Label Request Object
  - ERO = {strict R4, strict R8, strict R9}
  - Session object identifies LSP name
  - Session Attributes: Priority, preemption, and fast reroute
  - Sender T_Spec: Request bandwidth reservation
- Contains Router Alert IP option

Extended RSVP – RESV Message

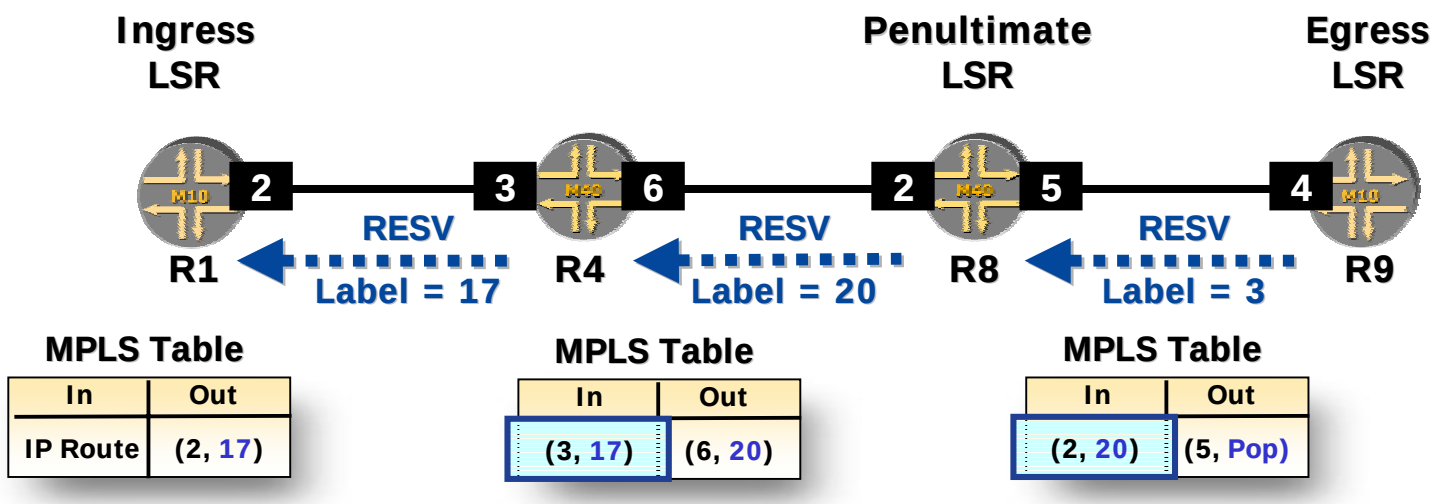

- R9 transmits a RESV message to R8
  - Label = 3 (indicates that penultimate LSR should Pop header)
  - Session object to uniquely identify the LSP
- R8 and R4
  - Stores “outbound” label, allocate an “inbound” label
  - Transmits RESV with inbound label to upstream LSR
- R1 binds label to FEC

How Is Traffic Mapped to an LSP?

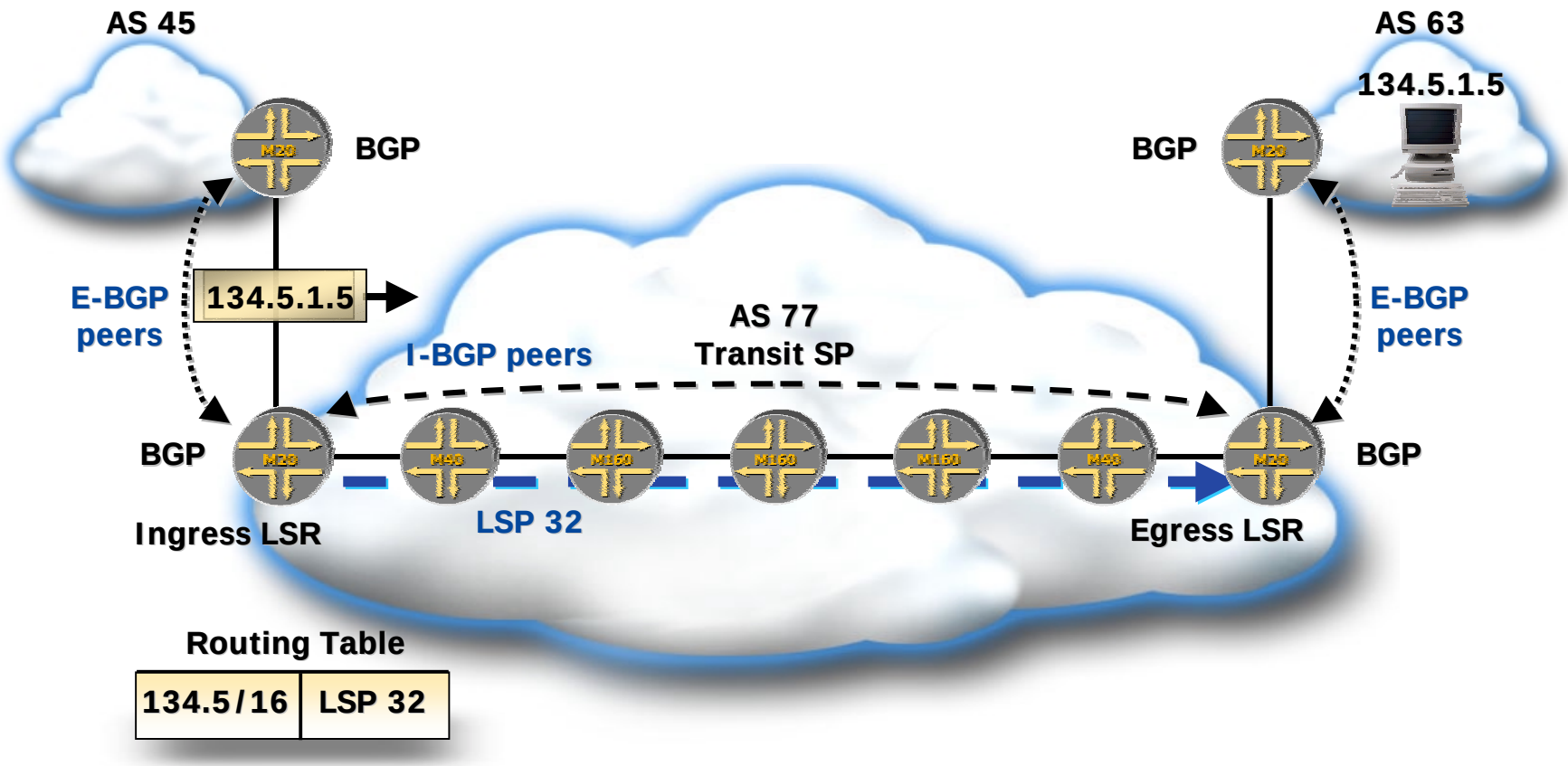

- Map LSP to the BGP next hop
- FEC = {all BGP destinations reachable via egress LSR}

Supporting A Routing Hierarchy

Supporting a Routing Hierarchy

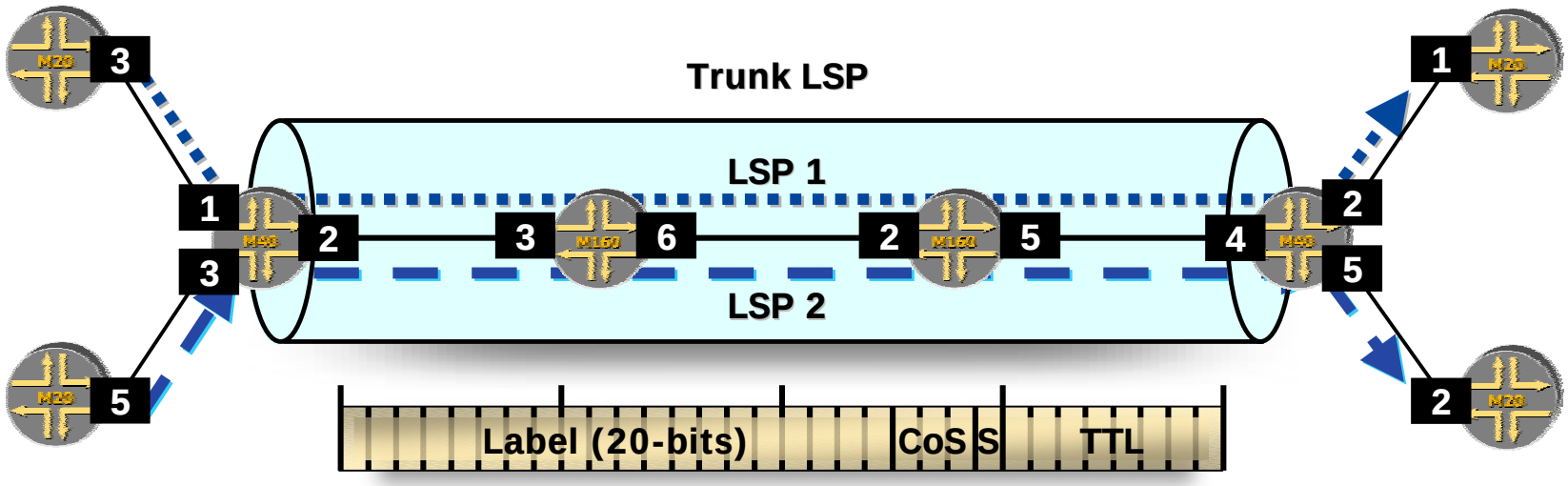

- A label stack is an ordered set of labels
- Each LSR processes the top label
- Applications
  - Routing hierarchy
  - Aggregate individual LSPs into a “trunk” LSP
  - VPNs

MPLS Label Stack: Example 1

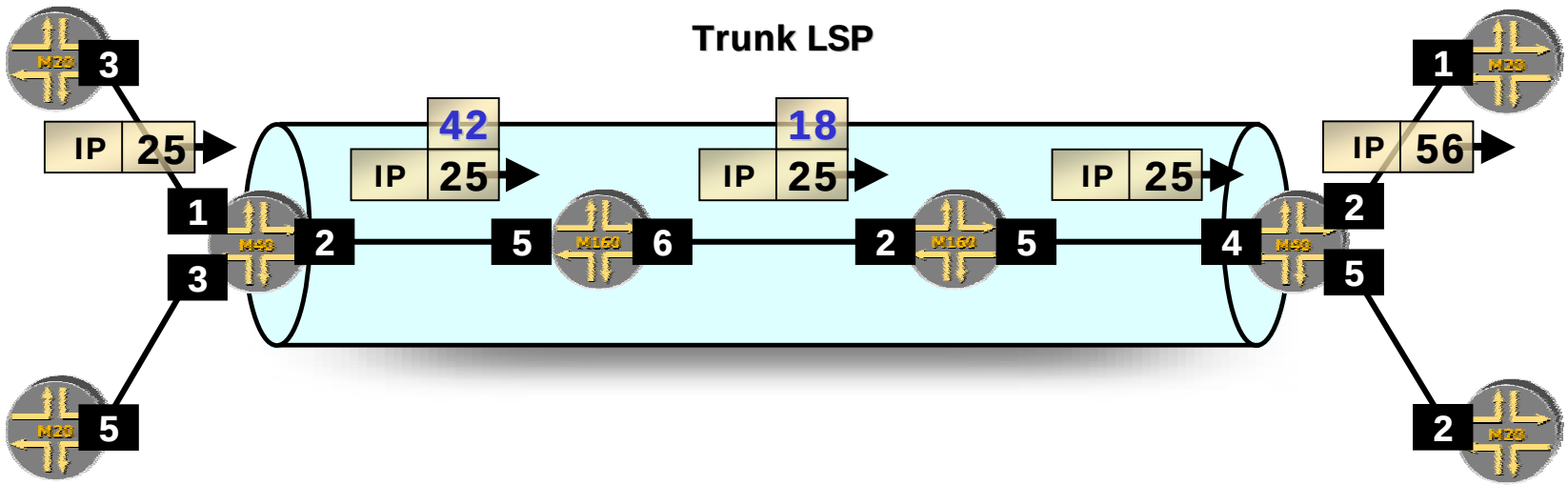

MPLS Table

In	Out
(1, 25)	(2, Push [42])
(3, 35)	(2, Push [42])

MPLS Table

In	Out
(5, 42)	(6, 18)

MPLS Table

In	Out
(2, 18)	(5, Pop)

MPLS Table

In	Out
(4, 25)	(2, 56)
(4, 35)	(5, 17)

MPLS Label Stack: Example 2

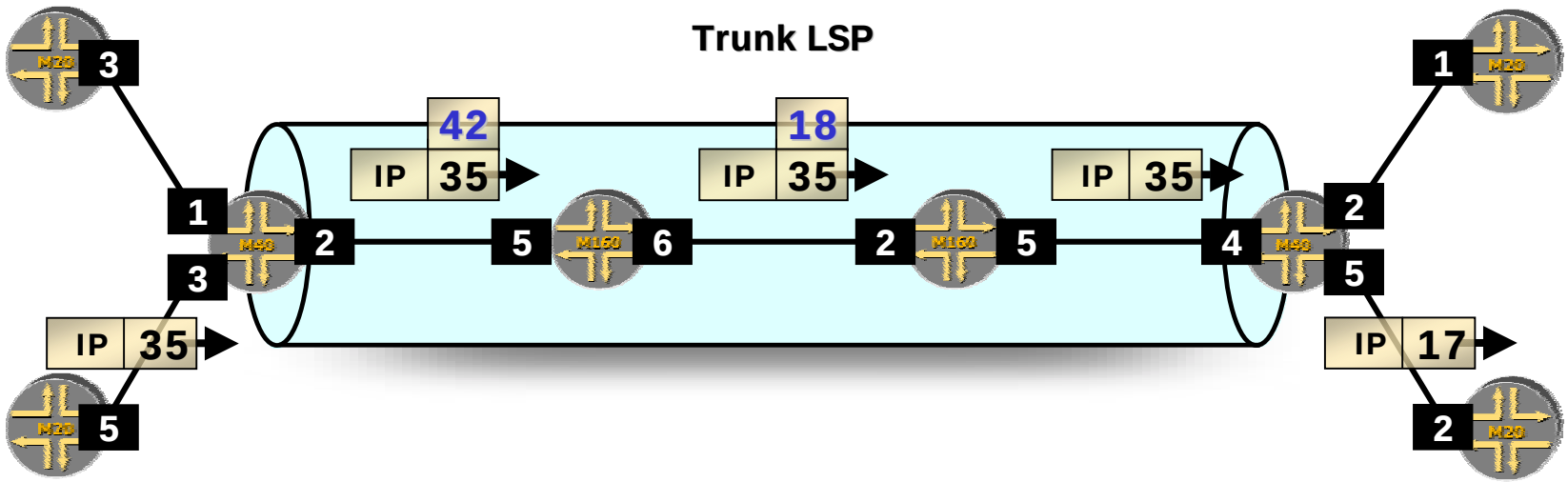

MPLS Table

In	Out
(1, 25)	(2, Push [42])
(3, 35)	(2, Push [42])

MPLS Table

In	Out
(5, 42)	(6, 18)

MPLS Table

In	Out
(2, 18)	(5, Pop)

MPLS Table

In	Out
(4, 25)	(2, 56)
(4, 35)	(5, 17)

Summary: MPLS Fundamentals

- The New Public Network
- MPLS terminology
- MPLS packet forwarding mechanism
- LSP physical path determination
- LSP signaling protocols
- FEC/label binding mechanisms
- MPLS routing hierarchy