Designing (Best Practice) IP Networks

Roosevelt Ferreira

Consultant

roosevelt@juniper.net

Agenda

- Internetworking today
- Designing large-scale IP networks
  - Building a network from the ground up
  - Network topology
  - Routing protocols
  - MPLS traffic engineering
  - Management
- Conclusion

Agenda

- **Internetworking today**
- Designing large-scale IP networks
- Conclusion

Internetworking Today

The Big Picture

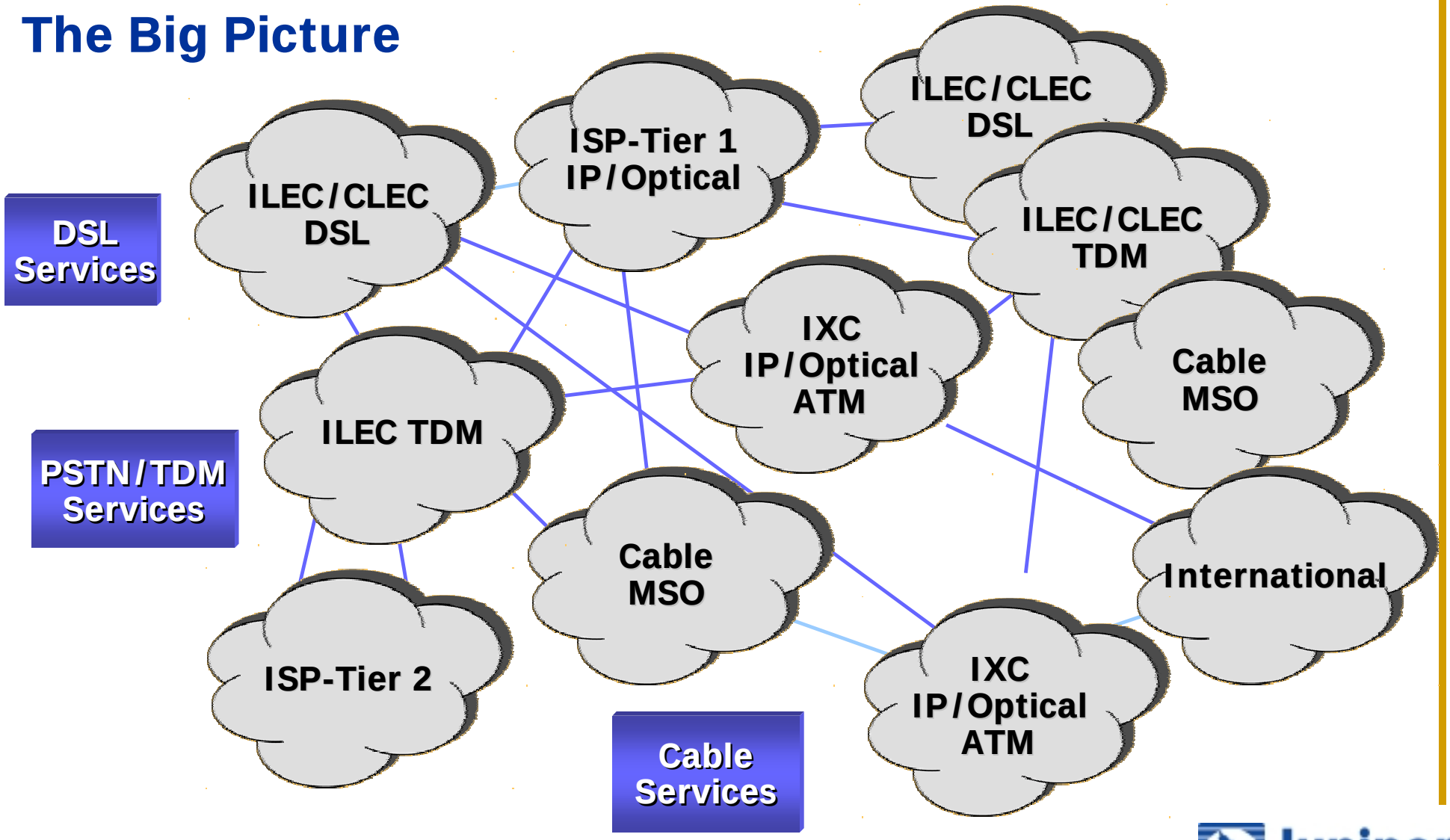

Internetworking Today

- Networking trends
  - Infrastructure
    - Circuit switched -> packet switched
    - First-generation optical network -> second-generation
    - Voice centric -> data centric
  - Service
    - Best effort transport -> IP value-added differentiated services
  - Private networks
    - ATM/FR, leased line -> IP-based VPN
  - Business networks
    - In-house -> outsourced

Internetworking Today

What Is Happening in the Core?

- Switched backbone
  - ATM or Frame Relay
  - Overlay model
- Routed backbone
  - Packet over SONET
  - DWDM

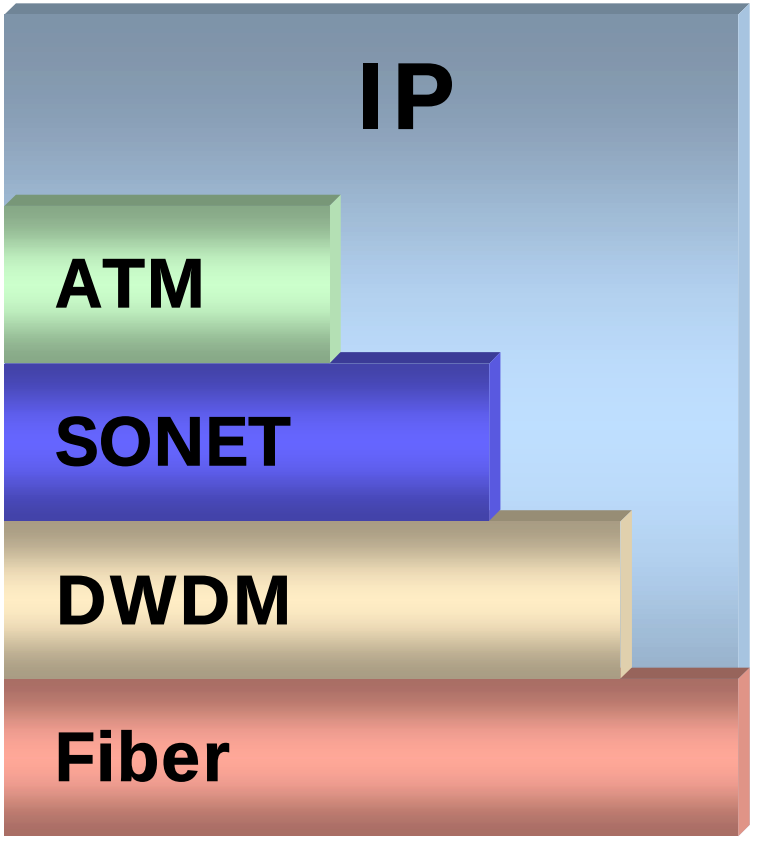

Agenda

- Internetworking today
- Designing large-scale IP networks
  - Building a network from the ground up
  - Network topology
  - Routing protocols
  - MPLS traffic engineering
  - Management
- Conclusion

Building a Network From the Ground Up

- Requirement analysis
- Capacity planning

Physical Design

- Select transmission technology
- Optimize circuit cost
- Identify physical locations

Logical Design

- Determine level of hierarchy
- Create access network design
- Develop strategy for access homing
- Create backbone topology
- Naming, addressing, and routing

Practical Design

- Security
- Network management

Designing Large-scale IP Networks

- **Network topology**
  - Hierarchy to scale
  - Redundancy to sustain failures
- **Routing protocols**
  - OSPF versus IS-IS
  - Design for reliability and scalability
- **MPLS traffic engineering**
  - Gradual migration
  - Process consistency
- **Management**
  - Scaling operations

Network Topology

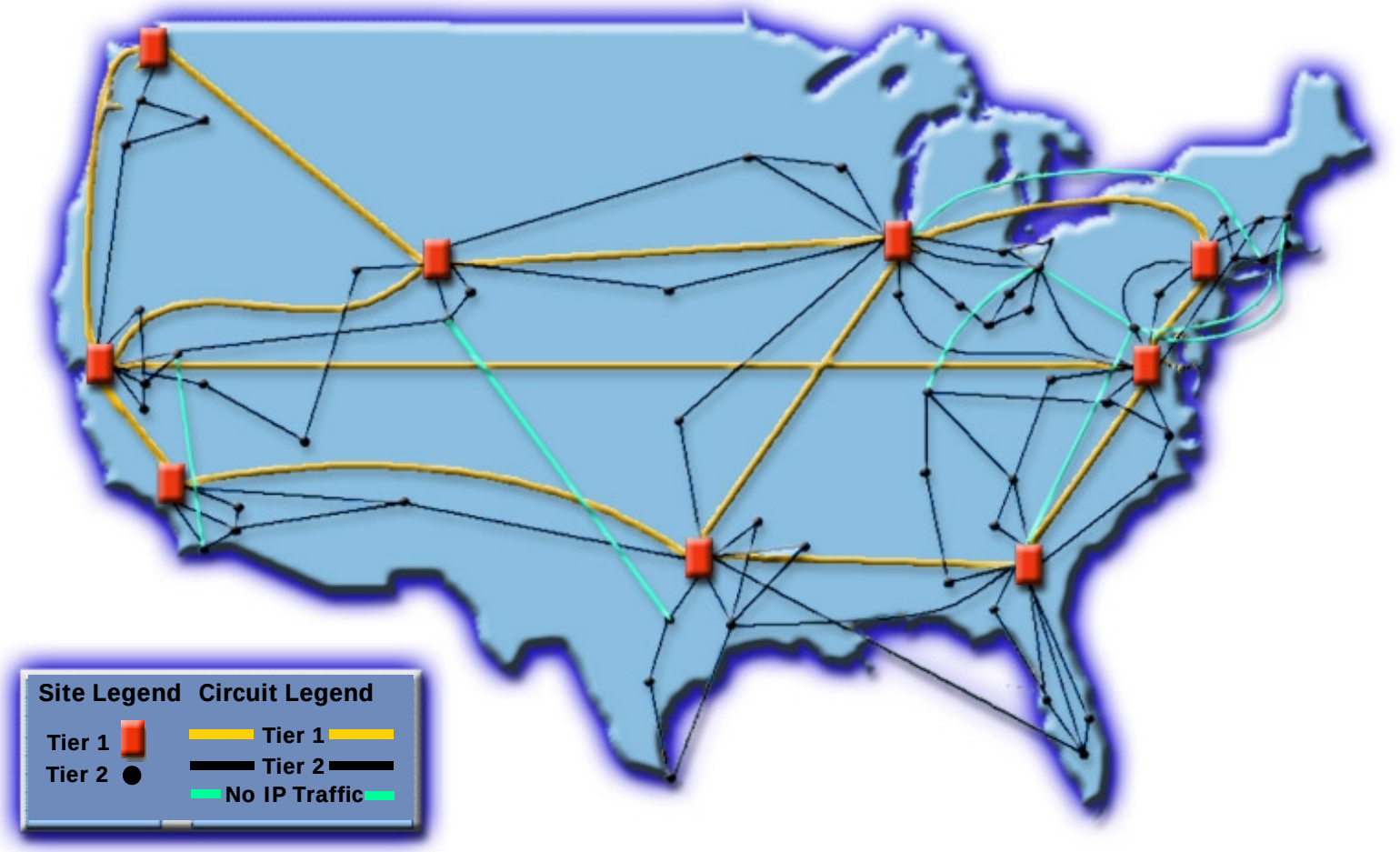

POP Topology

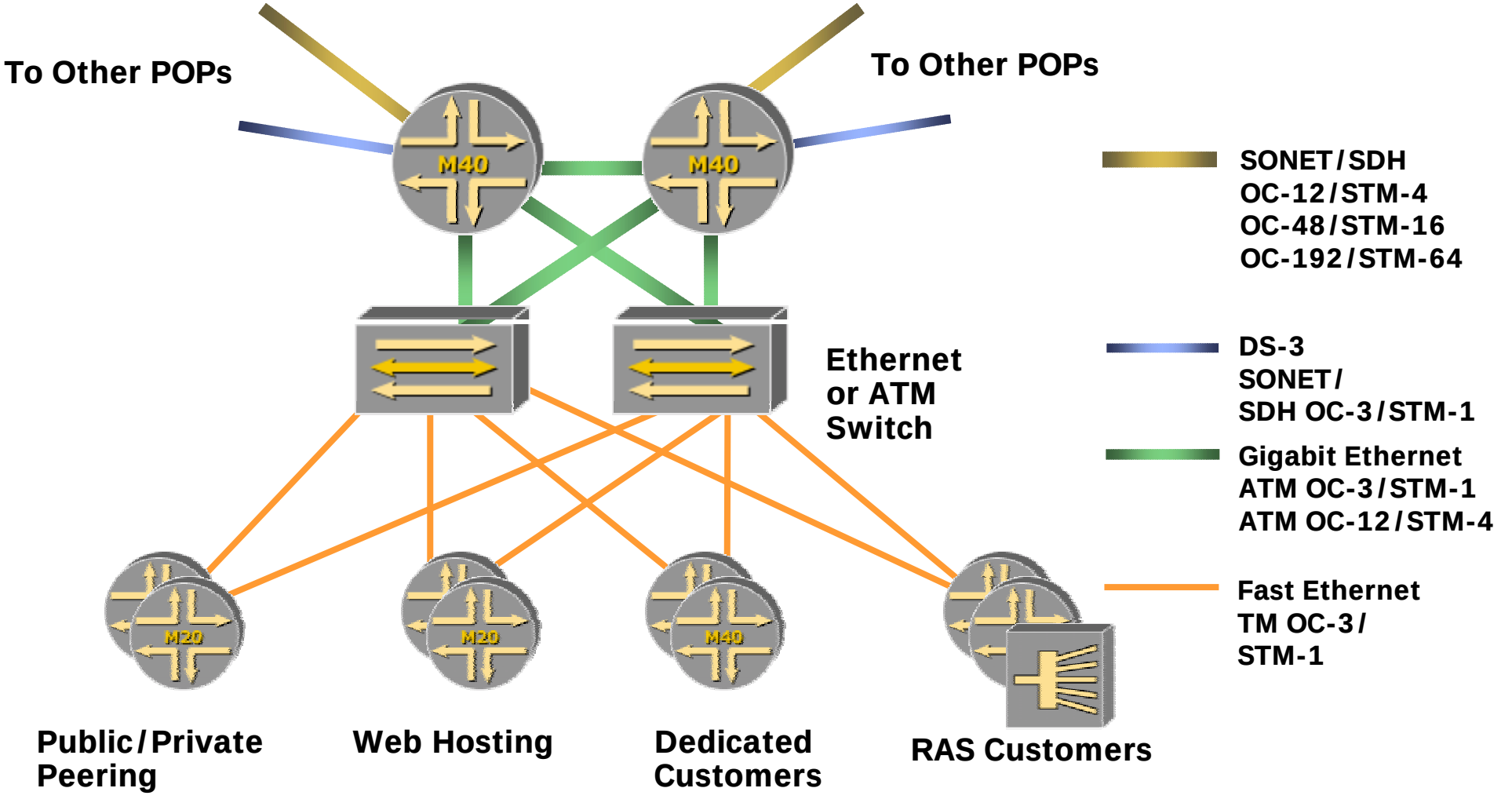

Designing Large-scale IP Networks

- Network topology
  - Hierarchy to scale
  - Redundancy to sustain failures
- **Routing protocols**
  - **OSPF versus IS-IS**
  - **Design for reliability and scalability**
- MPLS traffic engineering
  - Gradual migration
  - Process consistency
- Management
  - Scaling operations

Routing Design Characteristics

- Enterprise network
  - Wide variety of network devices, site configurations, and data transport requirements
  - More interior routes
- Service provider network
  - Less complex topology
  - Smaller variety of data link types and bandwidths
  - Fewer interior routes to be advertised
  - Complexity comes from
    - Efficiently managing many routes without placing an undue burden on network and router resources
    - External peering policies
    - Ability to monitor, manage, and predict heavy transit traffic

Reliable Routing Design: IGP

- IGP function
  - Provide necessary information for IBGP routers to locate peers and next hops
  - Route internal administrative traffic
- IGPs carry internal routes (such as infrastructure link IP, BGP peers' IP, and more)
- Logical hierarchy and route summarization improve IGP reliability and scalability
- NEVER redistribute BGP into your IGP

Choosing a Routing Protocol: OSPF vs. IS-IS

	OSPF	IS-IS
Scalability	◆ Supports hierarchy via areas ◆ Boundary falls within router ◆ LSDB: limited by network & router LSA size — 64 KB to ~5000 links	◆ Supports hierarchy via levels ◆ Boundary falls on links ◆ LSDB: Limited by number of LSPs — 256 * max LSP size
Stability	◆ Largely depends on routing design and implementation ◆ Less proven in large networks, but catching up	◆ Largely depends on routing design and implementation ◆ More proven in large networks
Extensibility	◆ Uses new LSAs ◆ New extensions require significant development time	◆ Uses extensible TLV encoding scheme ◆ New extensions comparatively easy to implement
Manageability	◆ Widely used and well understood ◆ Easy to leverage existing operation expertise	◆ Uses in most large ISPs ◆ Easy to troubleshoot and predict

Reliable Routing Design: BGP

- Statically aggregate provider's entire address block
  - Do it in many places to provide redundancy
  - Announce only the aggregated address block to peers for scalability and stability (avoid route flapping)
- Statically aggregate each customer's network address block
  - Redistribute connected and static routes into BGP as aggregates
- Use aggregation wherever possible

Scalable Routing Design: BGP

- **Confederation**
  - BGP router has to change AS number, which means DOWNTIME!
  - Maintenance is complex due to reconfiguration of ALL routers in AS
  - Sub-confederation may have different BGP policies
- **Route Reflector (RR)**
  - Easy to configure (clients are unchanged)
  - Does not require downtime
  - Scales easily

Scalable Routing Design: BGP

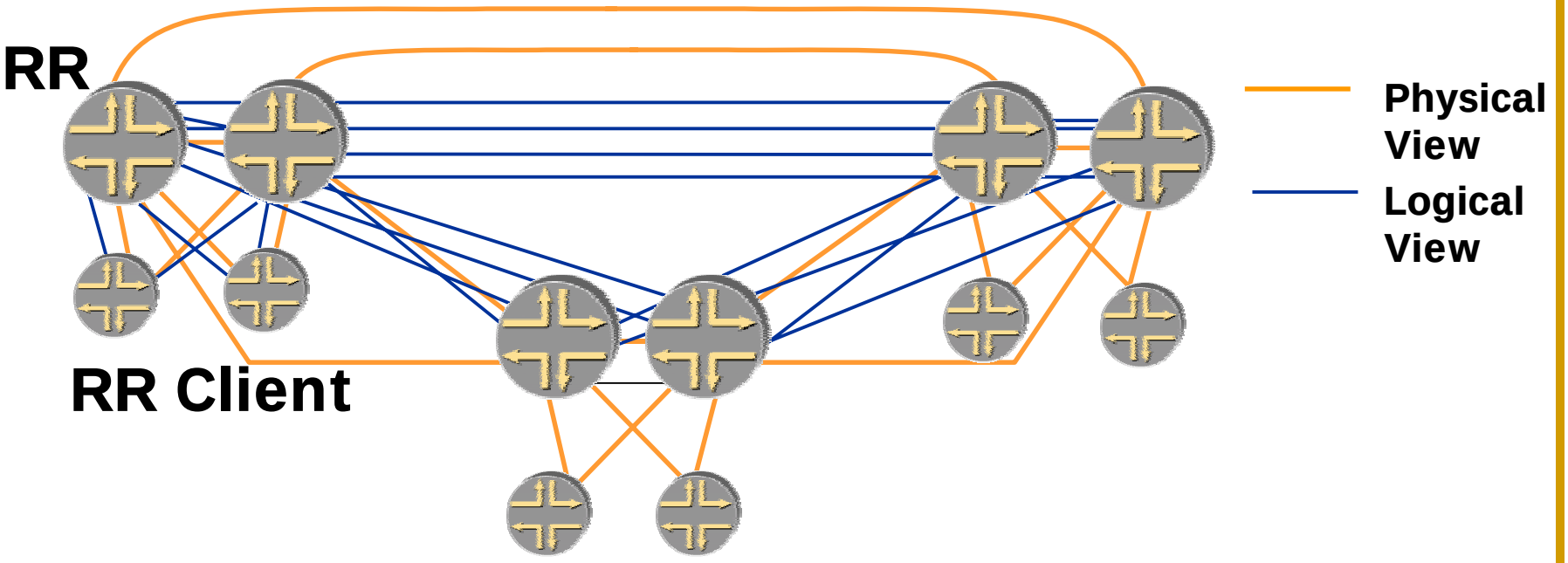

- Route reflector selection
  - Follow physical topology
    - Hub and spoke
  - Follow logical topology
    - RR as OSPF ABR or Level 2 IS-IS node

Scalable Routing Design: BGP

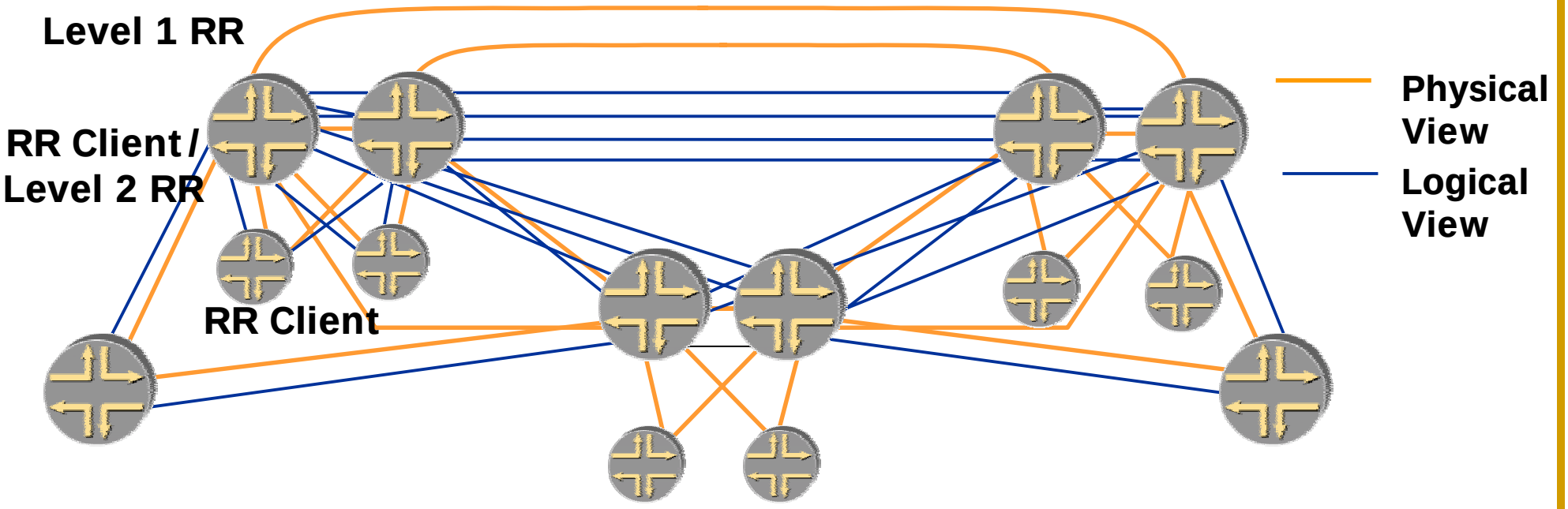

- **Route reflector hierarchy**
  - Tree-like RR hierarchy for large networks with dual-router POPs
  - Redundant RRs and overlapping RR clusters for complex access homing topologies
    - Assign unique cluster_id to redundant RRs for better failure resilience and easier management
  - RR route update behavior: RFC 1966

Designing Large-scale IP Networks

- Network topology
  - Hierarchy to scale
  - Redundancy to sustain failures
- Routing protocols
  - OSPF versus IS-IS
  - Design for reliability and scalability
- **MPLS traffic engineering**
  - **Gradual migration**
  - **Process consistency**
- Management
  - Scaling operations

MPLS Traffic Engineering: Gradual Migration

- **Phase I: deploy MPLS traffic engineering at backbone core sites**
  - Most traffic is aggregated here
  - Increases core network restoration
  - Provides operational experience
- **Phase II: extend MPLS traffic engineering to entire backbone network**
  - Enhances control of edge-to-edge traffic flows
- **Phase III: leverage MPLS infrastructure for value-added services**
  - For example, tunneled services from edge devices

MPLS Traffic Engineering: Follow a Consistent Process

- Determine extent of MPLS system
- Begin MPLS LSP capacity planning by collecting statistics
  - Build traffic matrix
- Calculate physical path for each LSP
  - Offline; online CSPF; hybrid
- Map traffic onto LSP
  - BGP next hop
- Select protection mechanism for each LSP
  - None; hot-standby secondary LSPs; Fast Reroute
- Periodically repeat to account for changes

Designing Large-scale IP Networks

- Network topology
  - Hierarchy to scale
  - Redundancy to sustain failures
- Routing protocols
  - OSPF versus IS-IS
  - Design for reliability and scalability
- MPLS traffic engineering
  - Gradual migration
  - Process consistency
- **Management**
  - **Scaling operations**

Network Management

- **Key management targets**
  - **Fault**
  - **Configuration**
  - **Accounting**
  - **Performance**
  - **Security**

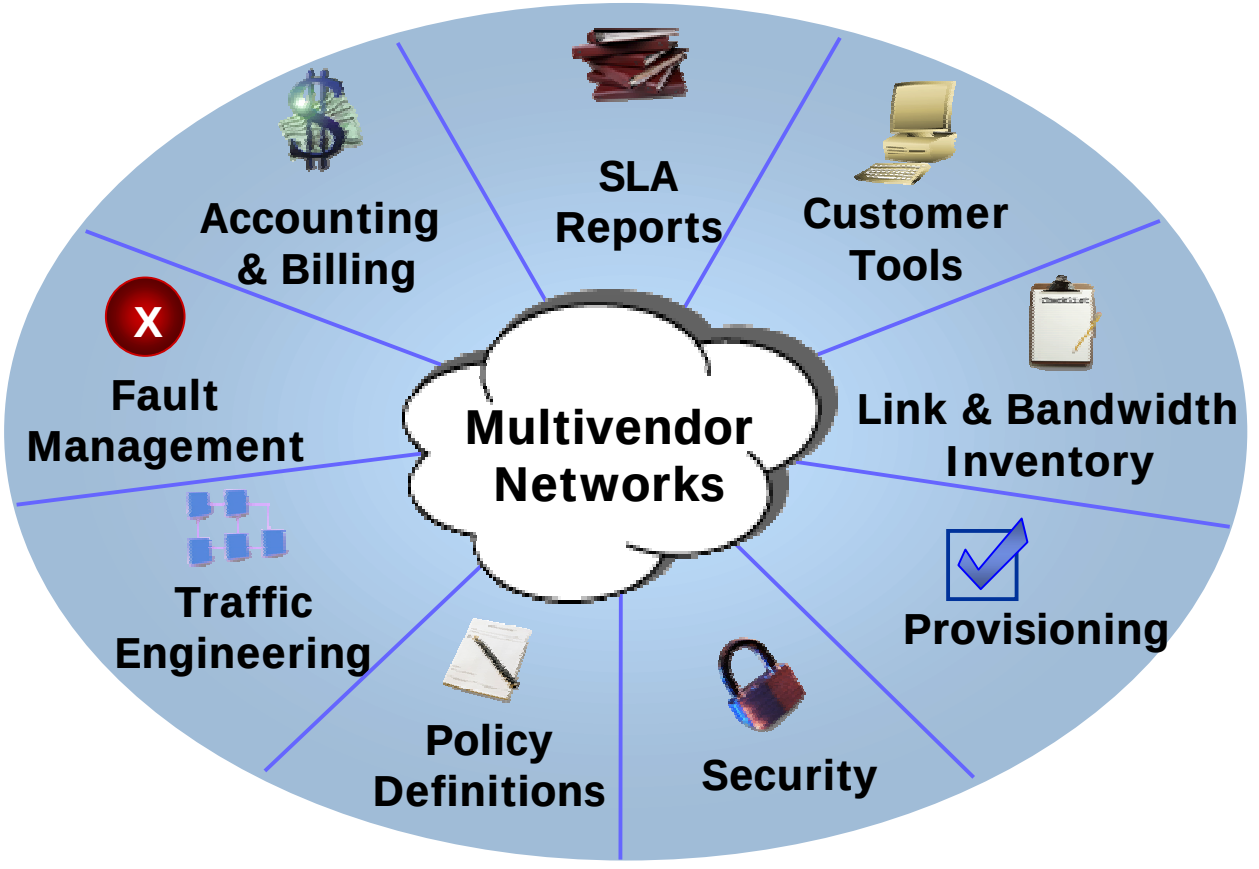

Network Management

- Network management solutions must scale with network growth to facilitate rapid, new service roll-out
  - Multivendor support
  - Open solution
- Rich router instrumentation helps!
  - SNMP, CLI, Syslog, XML
  - Statistics for accounting and billing
  - Logical and physical link management
  - Event and threshold notification

Agenda

- Internetworking today
- Building a network from the ground up
- **Conclusion**

Conclusion

- **Key elements of network design**
  - **Follow a consistent design process**
  - **Design for performance**
  - **Design for scalability**
  - **Design for reliability**

Obrigado!

roosevelt@juniper.net

http://www.juniper.net